ME 4610: Capstone Design
Summer Semester A.Y. 2023-24

Group 3 (ME-B)

Forward Propulsion Using Ionic Thruster

Group Members

1.210011243
2.210011214
3.210011253
4.210011262
5.210011264
6.210011285

Introduction

Ionic thrusters, also known as **electrohydrodynamic (EHD) thrusters**, generate thrust by accelerating ions in an electric field. Unlike conventional propulsion systems, ionic thrusters operate without moving parts, offering silent operation, low mechanical wear, and potential applications in cooling, propulsion, and micro-airflow control. The ionic thruster works by applying a high voltage to thin emitter wires, creating a strong electric field that ionizes nearby air or gas molecules. The ions are pulled toward a collector, and as they move, they collide with neutral molecules, pushing them forward to create an ion wind. The reaction from this airflow produces thrust, allowing the device to move without any moving parts.

Applications

- **Satellite Propulsion**
- **Spacecraft Propulsion**
- **High-Altitude Research Vehicles**

Working Principle

High Voltage Applied → Air Molecules Ionized → Ions Accelerated by Electric Field → Ionic Wind Generated → Thrust Produced

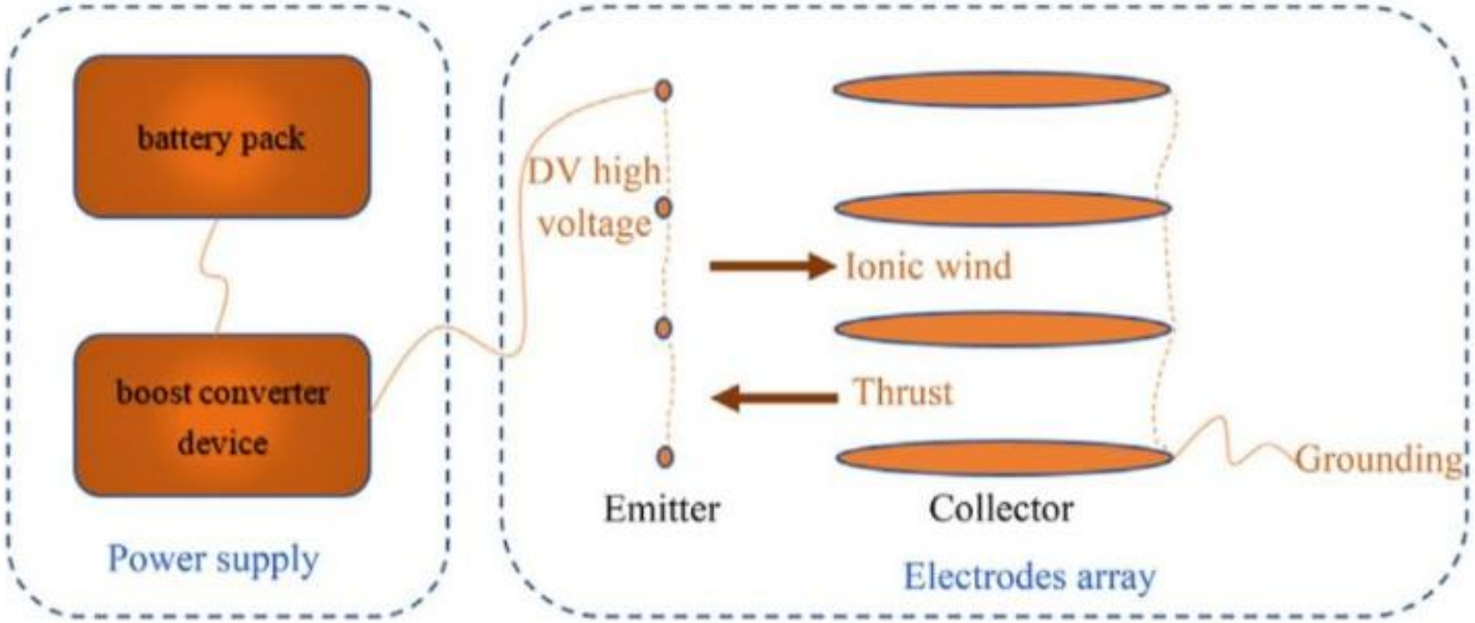

Reference: https://doi.org/10.1016/j.jppr.2023.01.001

Planning and Timeline

INITIAL RESEARCH AND SIMULATION SETUP

Focused on understanding ionic wind & high-voltage safety hazard, conducted preliminary simulations & outlined safety measures.

SIMULATION MODEL DEVELOPMENT & ANAYSIS

Studied corona discharge physics and simplified 1D simulation for thrust production, analyzed the economic feasibility and worked on the electrode structure design.

MODEL VALIDATION & 2D SIMULATION

Validated 1D simulation and began developing a 2D model, designed simpler electrode setups for easier simulation and explored EHD integration

3D SIMULATION SETUP & DATA EXTRACTION

Worked on 3D ionic pump validation and extracted data from published research, addressed few challenges with simulation coupling and boundary conditions

FINAL 3D SIMULATION REFINEMENT

Refined 3D simulation model and resolved issues with electrode design and boundary conditions, prepared and finalized presentation materials for the project.

Design Initial phase

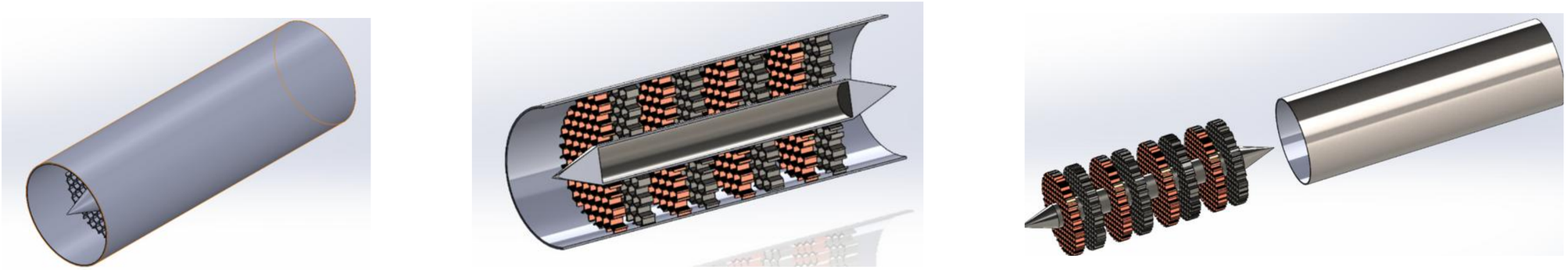

Fig. Designed CAD Model of Ionic Thruster

The ionic thruster concept CAD model was designed in SolidWorks 2023, featuring a cylindrical housing with four electrode layers **(Red part as anode, Gray as cathode)**

The honeycomb structure ensured a uniform electric field, improved ion focusing, and reduced beam divergence, while the compact design with higher electrode density enhances thrust efficiency. This model serves as the baseline for further optimization and testing.

1st Iteration

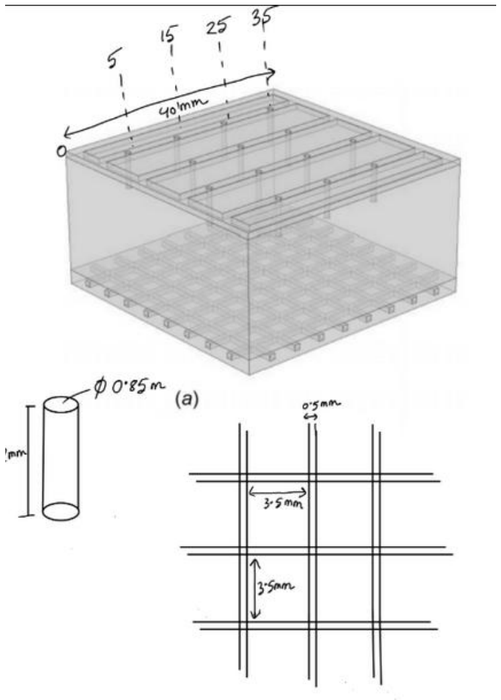

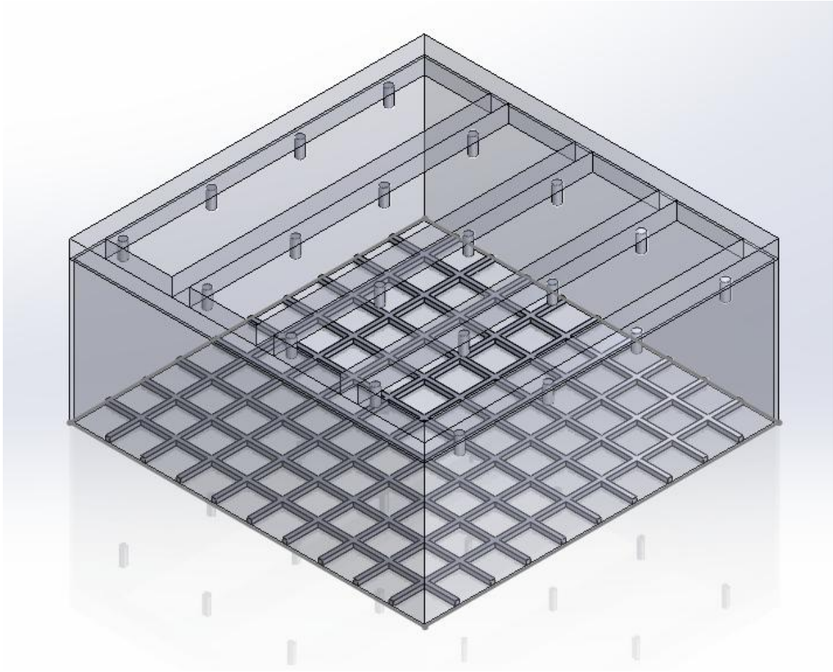

Fig. Rough Sketch and CAD design of Simplified Design (1st Iteration)

To validate our simulation data, A simplified version of the geometry was designed.
It consists of three main parts:

- Needle
- Mesh Grid
- Air Domain

The design was developed using data extracted from research papers.

- Overall Dimensions: 40 mm × 40 mm × 16 mm
- Needle: Diameter 0.085 mm, Length 2 mm
- Grid Size: 3.5 mm × 3.5 mm × 0.5 mm
- Needle Arrangement: Needles were placed symmetrically on the top lid, with 4 needles per column, for a total of 20 needles.

Reference : https://doi.org/10.1115/1.4041391

Forward propulsion using ionic thruster

2nd Iteration

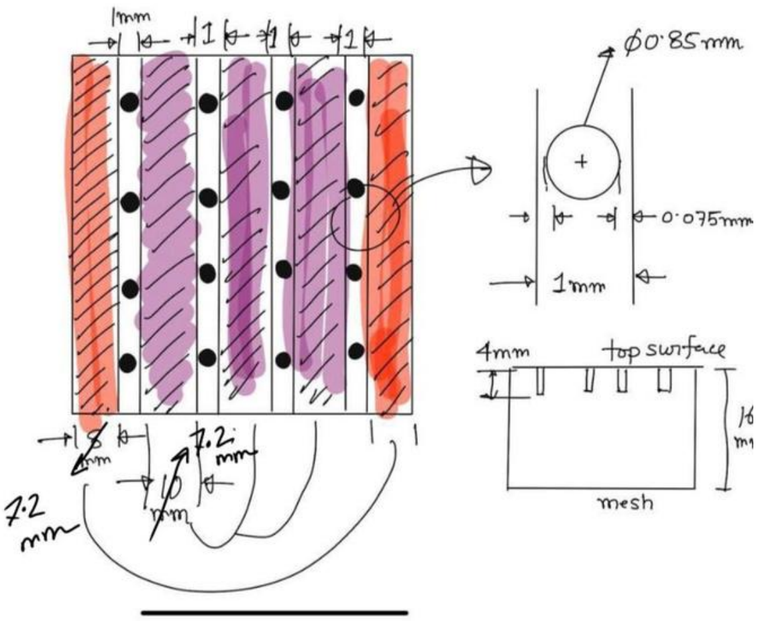

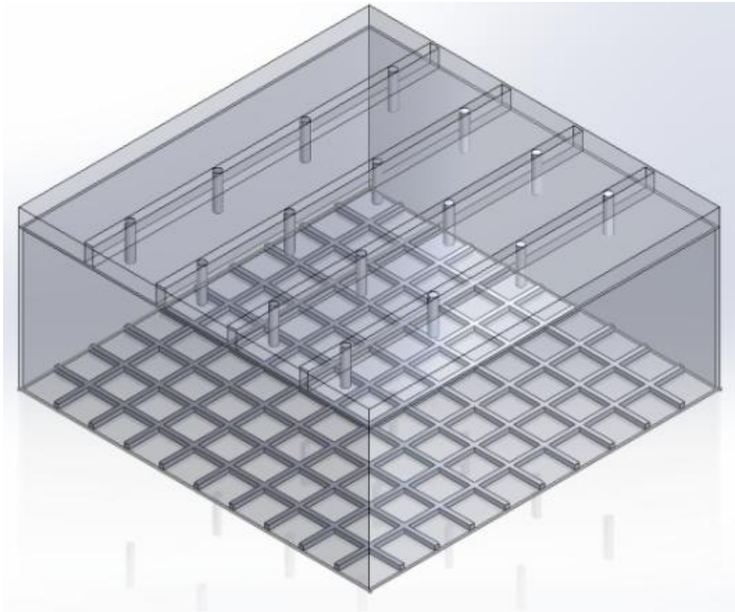

Fig. Rough Sketch and CAD design of Simplified Design (2nd Iteration)

Reference : https://doi.org/10.1115/1.4041391

After thoroughly reviewing the research paper, we realized a mistake in interpreting the diagram of the top lid and the corresponding needle positions.
To correct this, we re-extracted the data, created rough sketches, and redesigned the model in SolidWorks.

Changes Made:

- In the top lid, the vented and solid portions were interchanged.
- Needles were repositioned between the vented spaces.

Finally, the redesigned model was exported to **COMSOL Multiphysics 6.3** for simulation.

Simulation progress

1D

Physics Used: Corona Discharge (Electrostatic, Charge Transport, Multiphysics(Electrode))

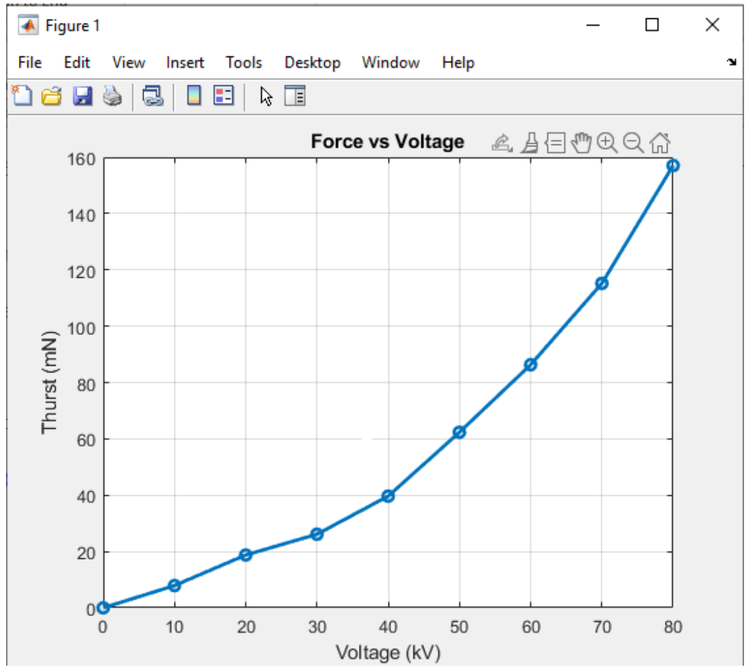

Fig. Thrust vs Voltage from Comsol Multiphysics 6.3

Coulomb force density integral

$$F = \int \rho . E$$

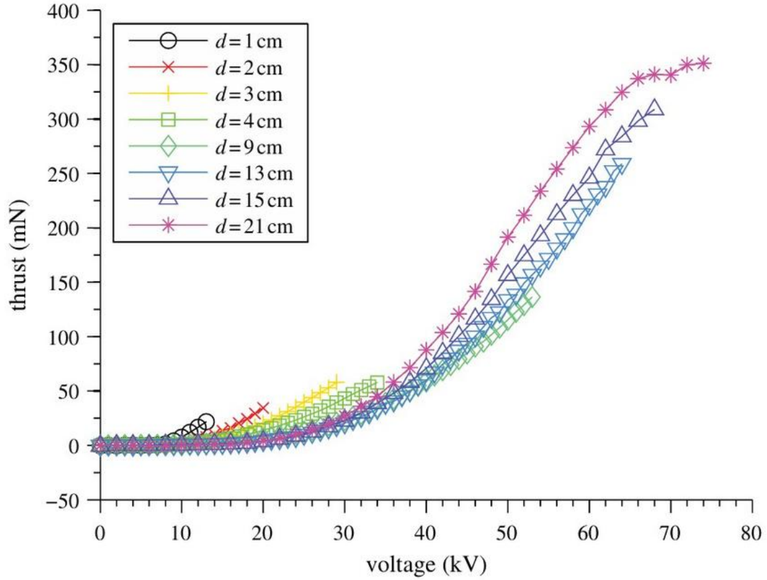

Fig. Thrust vs Voltage from practical data

2D

Physics Used: Corona Discharge (Electrostatic, Charge Transport, Multiphysics(Electrode))

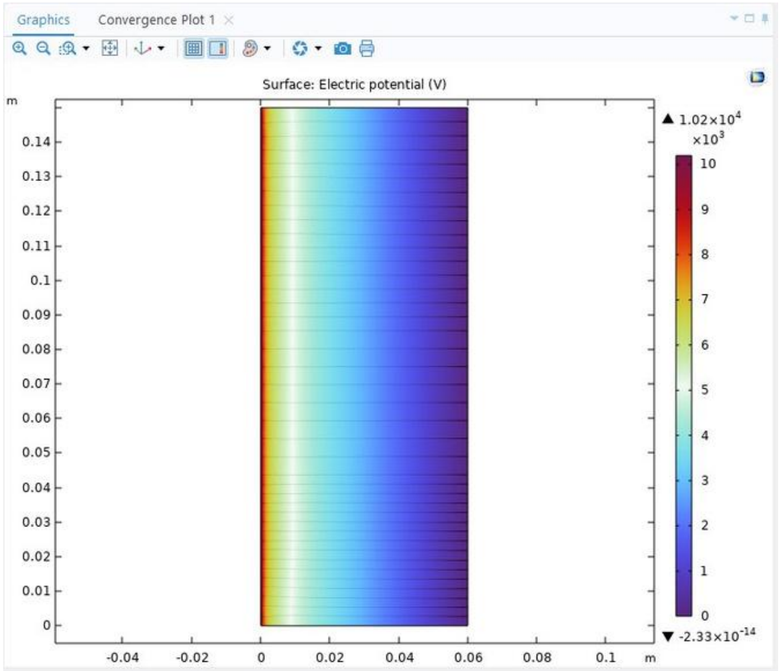

10 kV

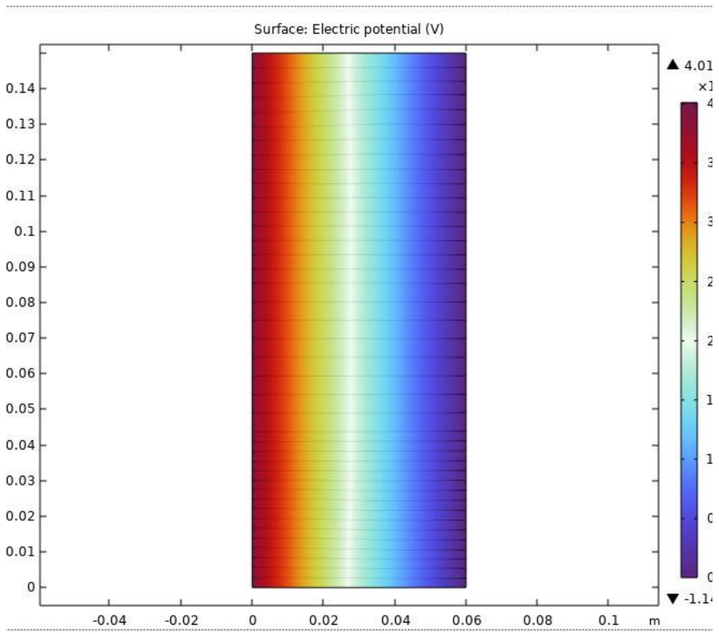

40 kV

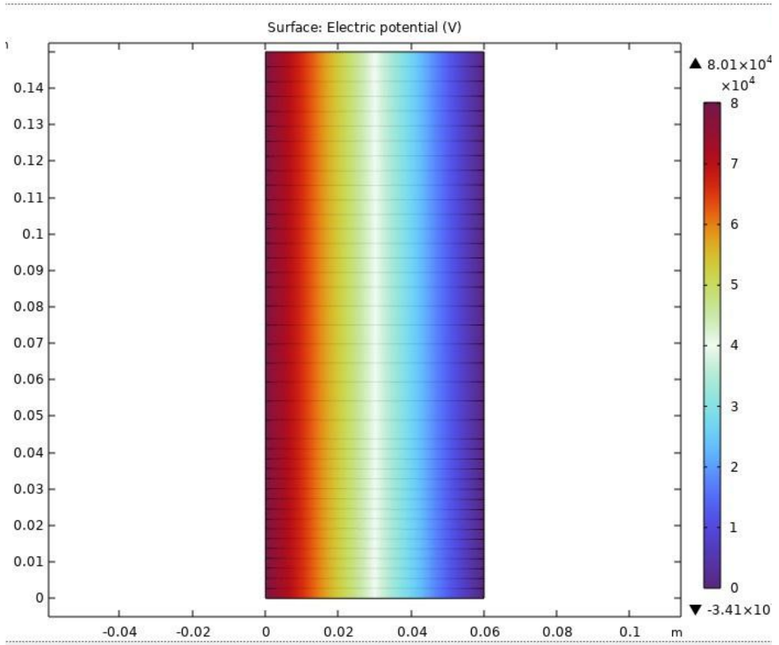

80 kV

Fig. Generation of Electric FIeld from Comsol Multiphysics 6.3

Forward Propulsion Using Ionic Thruster

2D

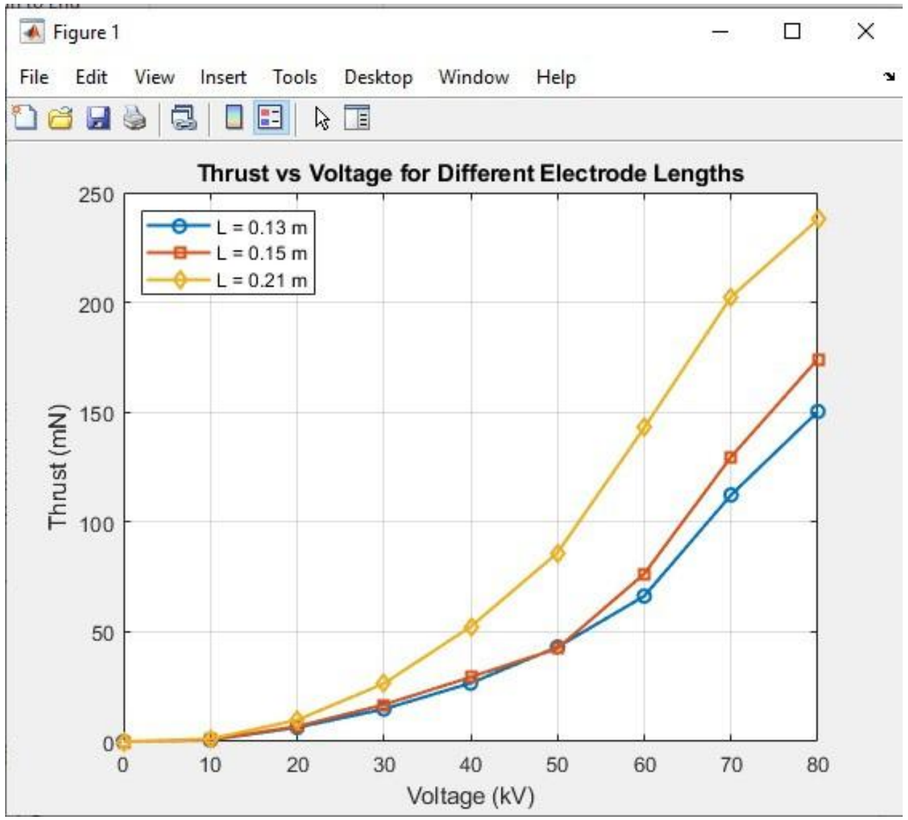

Fig. Thrust vs Voltage from Comsol Multiphysics 6.3

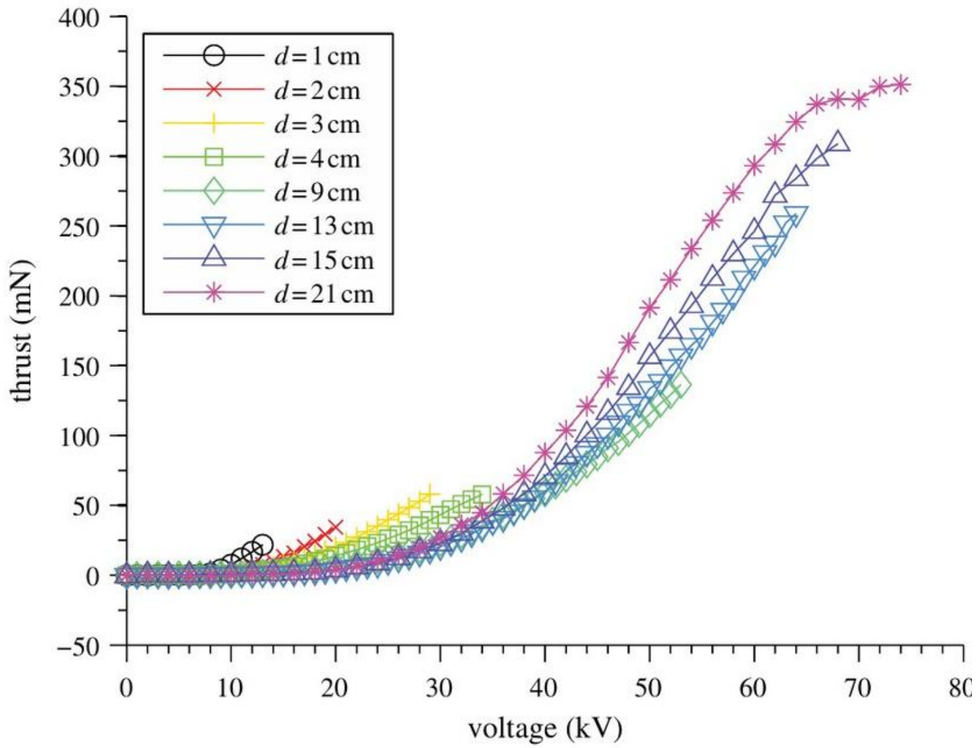

Fig. Thrust vs Voltage from practical data

3D

Selected Geometry:

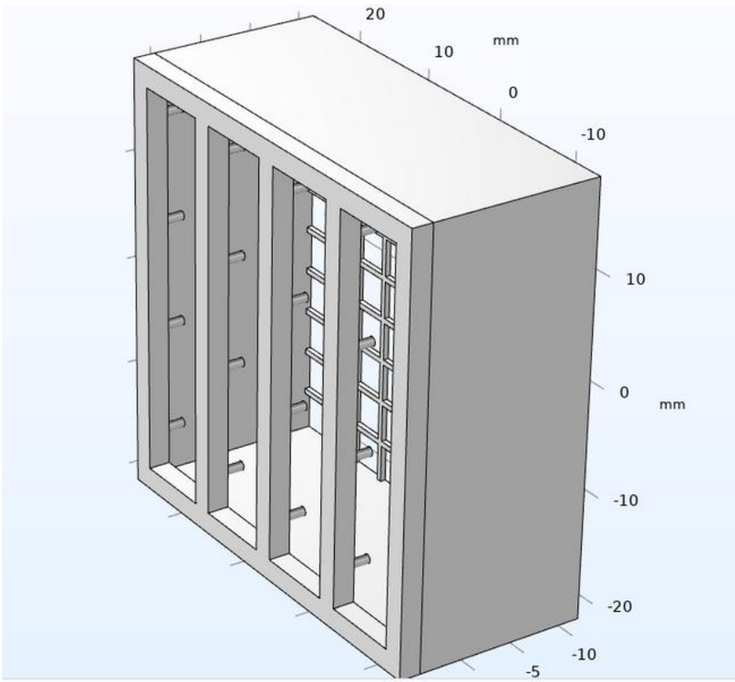

Crucial Components:

- 1.Needle
- 2-Mesh Grid
- 3-Air Domain

Required Physics:

Electrostatics: **Input**-Applied voltage(V). **Output**-Electric Field(E)

General Form PDE: **Input**-Electric Field(from electrostatics). **Output**-Surface charge density(q)

Fluid Flow: Laminar flow. **Input**-E and q from previous steps. **Output**-Body Force(F=q*E). This body force(F) is used to calculate the exit velocity(thrust).

Forward Propulsion Using Ionic Thruster

3D

Meshing:

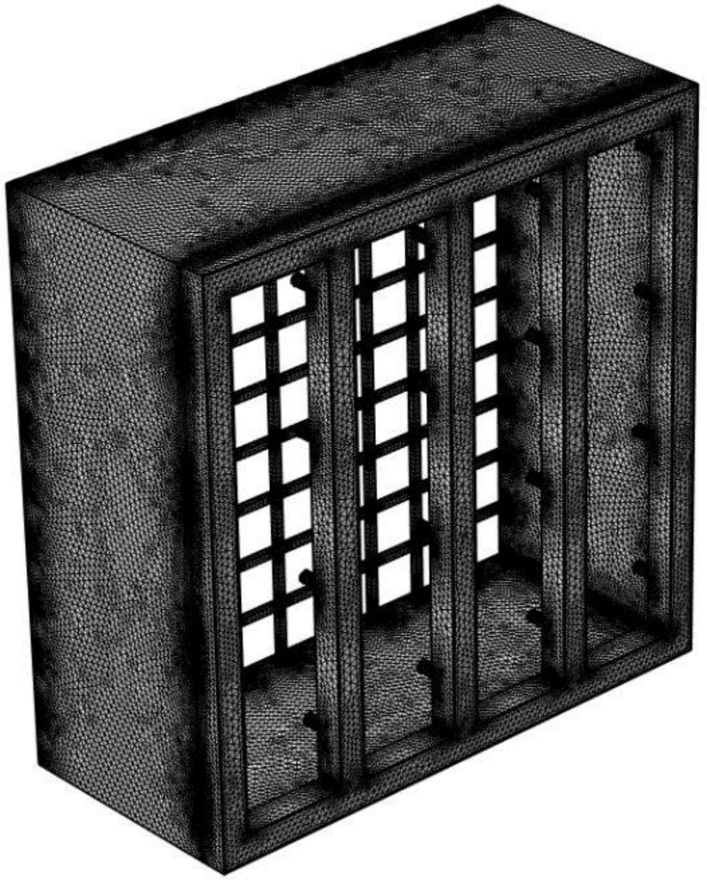

Element Count: 1.4 Million

COMSOL Simulation Workflow:

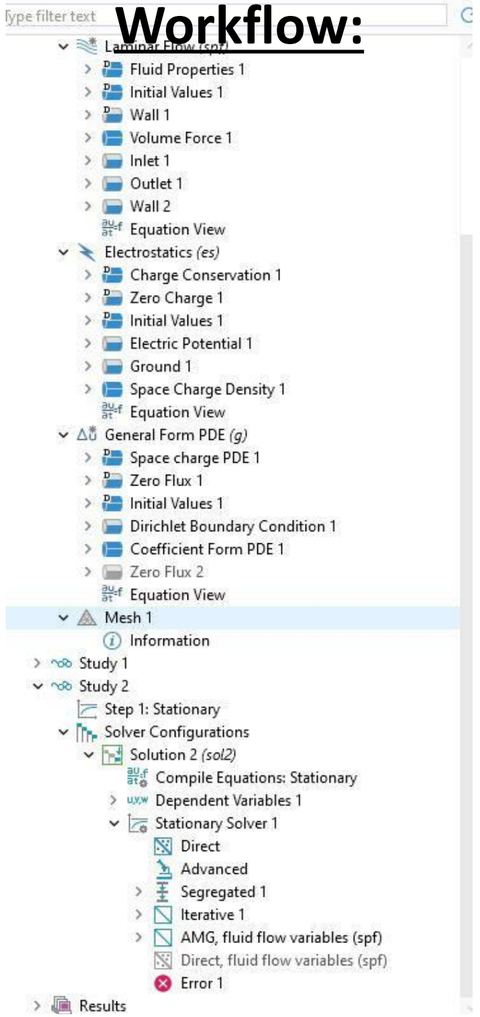

3D

Key Findings and comparing:

- Velocity Vs Voltage plot:

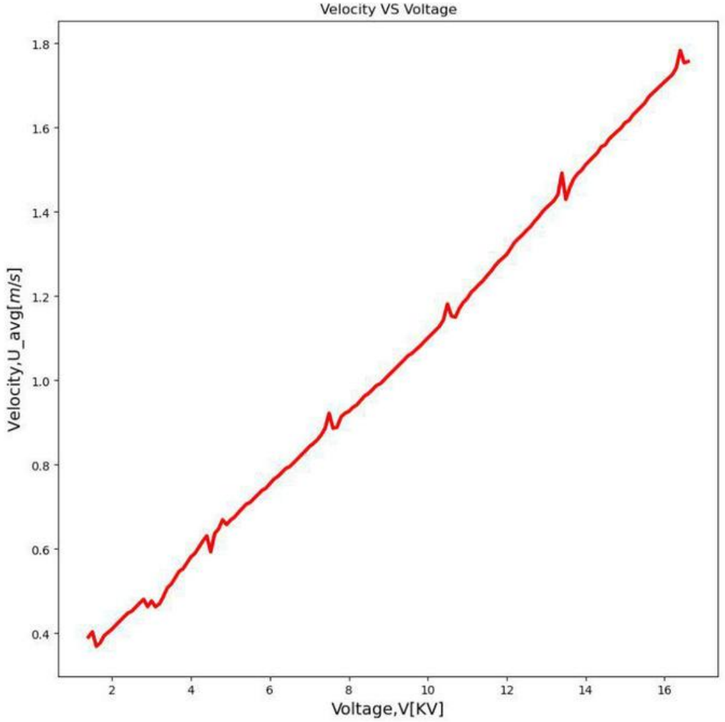

- Velocity vs Grid Spacing plot:

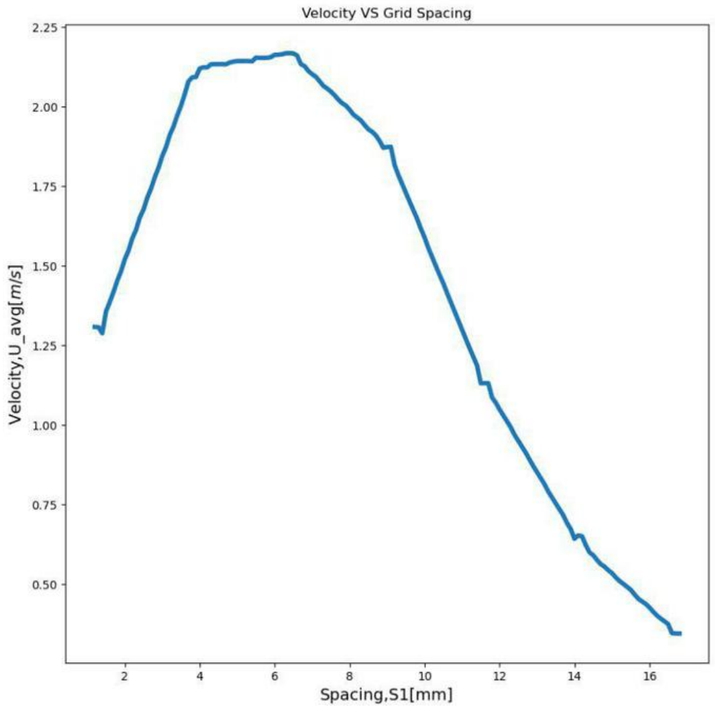

Result Comparison: The maximum velocity in the paper we are trying to validate is 2.05 m/s by applying 15KV voltage. In our simulation we have obtained maximum velocity of 1.85 m/s which is in between 8% deviation from the papers output.

Material Selection

The anode (positive electrode) attracts electrons from the cathode and creates a high-voltage field that accelerates positive ions out of the thruster, ensuring controlled ion flow for thrust generation. The cathode (negative electrode) emits electrons to neutralize the ion beam

Anode (Positive Electrode):

- **Material: Copper** – excellent conductivity, low voltage drop

Cathode (Negative Electrode):

- **Material: Steel Wire Mesh** – strong, corrosion-resistant

Manufacturing

Electroplating and Graphene Spray

- 3D print the electrodes.
- Use graphene spray as a binder on the electrodes.
- Electroplate the electrodes with necessary materials.

Pros: Excellent surface finish, easy to work with, uniform corona discharge
Cons: Expensive, not easily available

DIY Graphite Paint

Composition:

- Graphite Powder: 12.5%
- Acetone: 83%
- Super Glue: 4.5%

Pros: Cheap, easily available
Cons: Uneven surface finish, harder to work with, unpredictable corona discharge

Sand Molding

After CAD design, the part can be **3D printed** using PLA, PETG or ABS.

The printed object serves as a **master model for sand molding**, enabling the creation of complex geometries without traditional pattern-making.

We can visit **Nawabpur** for the molding process. Their work is quite accurate, as demonstrated in the reference image.

Pros: It is quite **cheaper** than other machining procedures.

Cons: The poured metals **might not be 100% pure** and may contain other metals and debris, which may cause **reduction in the ion flow as well as thrust.**

Fig: Reference image from **previous work**

Future works

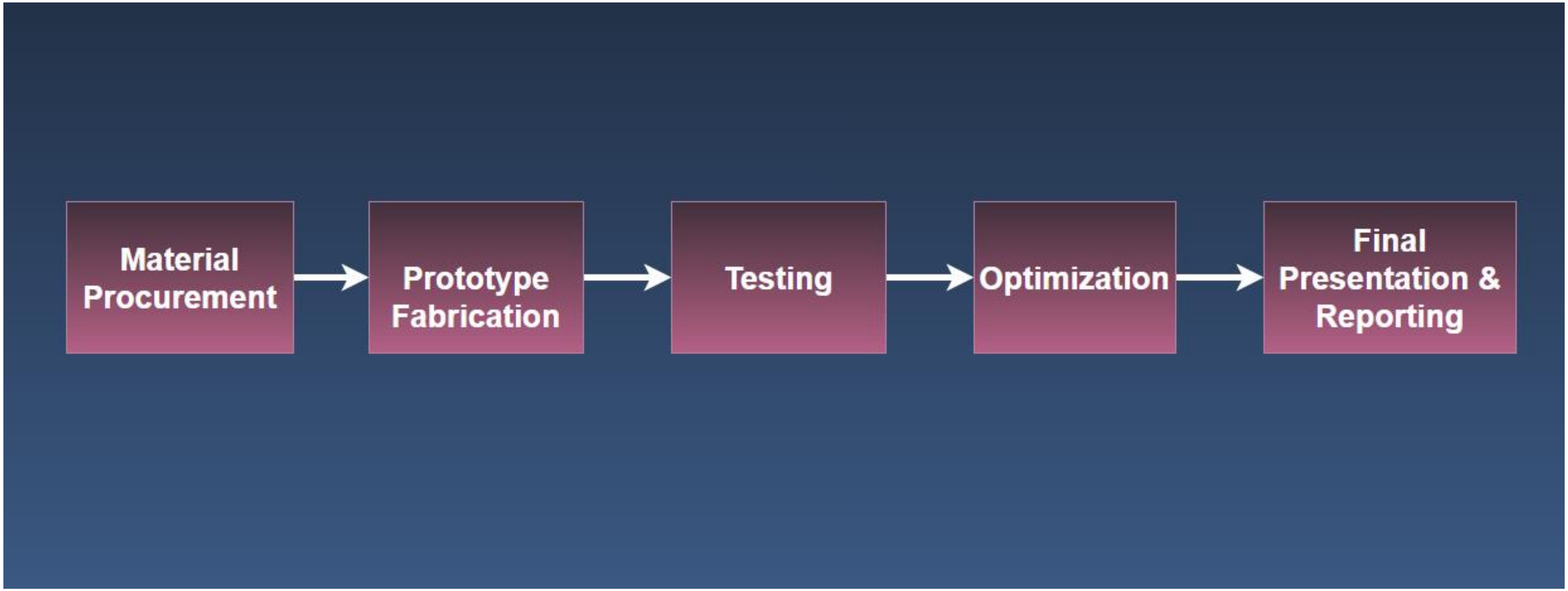

.

Thank You